INSTRUFIBER

Fibra Óptica Cabo Rede Instrumentação Energia Ferramenta

MS90

2-3. About This Instruction Manual

CopyRights Reserved by Instrufiber INSTRUMENTS CO., LTD. Making copies of whole or parts of this document without permission from Instrufiber is prohibited.

This manual was issued: 2019/1/15

Version Number: 2

2-4. Environment

1. WEEE Directive 2002/96/EC (Waste Electrical and Electronic Equipment)

This product is not subjected to WEEE Directive 2002/96/EC however it should not be mixed with general household waste. For proper treatment, recovery and recycling, please take this product(s) to the designated collection points.

Disposing of this product correctly will help save valuable resources and prevent any potential negative effects on human health and the environment, which could otherwise arise from inappropriate waste handling.

2. RoHS Directive 2002/95/EC (Restriction of Hazardous Substances)

Instrufiber Instruments has completed a comprehensive evaluation of its product range to ensure compliance with RoHS Directive 2002/95/EC regarding maximum concentration values for substances. As a result, all products are manufactured using raw materials that do not contain any of the restricted substances referred to in the RoHS Directive 2002/95/EC at concentration levels in excess of those permitted under the RoHS Directive 2002/95/EC, or up to levels allowed in excess of these concentrations by the Annex to the RoHS Directive 2002/95/EC.

2-5. CE Declaration

EKO INSTRUMENTS CO.,LTD. 1-21-8 Hatagaya, Shibuya-ku, Tokyo 151-0072 Japan TEL:+81.3.3469.6713 FAX:+81.3.3469.6719

CE

DECLARATION OF CONFORMITY

We: EKO INSTRUMENTS CO., LTD
1-21-8 Hatagaya Shibuya-ku, Tokyo
151-0072 JAPAN

Declare under our sole responsibility that the product:

Product Name: DNI Sensor
Model No.: MS-90

To which this declaration relates is in conformity with the following harmonized standards of other normative documents:

Harmonized standards:

EN 61326-1:2013 (Emission)
CISPR11 Class B
EN 61326-1:2013 (Immunity)
EN 61000-4-2 EN 61000-4-3
EN 61000-4-4 EN 61000-4-5
EN 61000-4-6

Following the provisions of the directive:

EMC-directive : 2014/30/EU
LowVoltage-directive: 2014/35/EU

Date: December 6 , 2017

Position of Authorized Signatory: General Manager of R & D Department

Name of Authorized Signatory: Shuji Yoshida

Signature of Authorized Signatory: Shuji Yoshida

3. Safety Information

Instrufiber products are designed and manufactured under the consideration of the safety precautions. Please make sure to read and understand this instruction manual thoroughly to be able to operate the instrument safely and in the correct manner.



Attention to the user; pay attention to the instructions given on the instruction manual with this sign.

3-1. WARNING/CAUTION

1. Setup and Handling

□□ Fasten this product securely on a stage with bolts and nuts to prevent from falling due to strong wind, earth quake and so on events causing unexpected accidents.

□□ Do not tap or impact any objection the exposed glass tube. If any impact is given, the glass may break. Broken glass pieces may cause injury and/or accidents.

□□ Do not hold the glass tube when carrying. The glass tube may break and lead to serious injury and/or an accident from the broken glass as well as possibly dropping the electrical circuit parts.

2. Grounding

After initial installation or after moving the instrument to a different measurement site, make sure to connect the grounding cable. When the grounding cable is not properly connected, it may cause electrical shocks and/or leakage.

3. Power Supply

Make sure to check the power source voltage of the product, and the power supply voltage type (AC or DC) match before turning on the power of this product.

4. Introduction

MS-90 is a reinvention of Instrufiber MS-093 sunshine duration meter. MS-093 is a reliable and accurate sunshine duration meter, which has been deployed within the AMeDaS network in Japan for over 10 years. More than 800 stations gather precise sunshine duration information every day in this network.

MS-90 is anew sensor which accurately measures the Direct Normal Irradiance (DNI) without the need for a sun-tracker.

It has a rotating mirror, which only reflects the sunbeam onto a thermal pyroelectric detector. It can be used in combination with any pyranometer to measure the DNI and Global Horizontal Irradiance (GHI). This allows the user to later calculate the Global Horizontal Diffuse Irradiance (DHI).

MS-90 is highly suitable to be applied in solar energy monitoring systems and meteorological networks.

4-1. Main Functions

1. Direct Normal Irradiance

The MS-90 sensor accurately measures the Direct Normal Irradiance (DNI) without the need for a sun-tracker.

2. Very Precise Sunshine Duration Measurement

MS-90 measures DNI by pyroelectric sensor and rotating mirror.

The rotating mirror conducts the radiation including DNI to the sensor every 15 sec, and the sensor outputs the time derivative signal which is proportional to DNI. The comparator circuit in MS-90 makes non-voltage contact pulse as output of sunshine duration above the given threshold (120W/m2). Also the pyroelectric sensor has flat spectral characteristics thus it can correspond to the changes of the solar spectrum.

3. Mirror

The mirror inside the sensor head rotates 4times per minute.

This mirror has diffuse characteristics only in the declination direction, thus it does not affect the output signal by the declination changes. Without making any adjustments with mirror to the declination changes (±23.4°), the light is directed to the center of the sensor; therefore, it does not require any data correction or declination adjustments throughout the year.

4-2. Package Contents

Check the package contents first; if any missing item or damage is noticed, please contact Instrufiber immediately.

Table 4-1Package Contents

Standard Items	Qty.	Remarks
MS-90 Main Unit	1	Fixing Screws (M5 x 2pcs) Grounding Cable: 1m
Sensor Cable	1	Standard cable length: 10m
Latitude Fixing Screw & Hexagon Wrench	1Set	Includes: 1 set of screw, 1 hexagon wrench
Base Plate	Option	Include leveling feet (x3pcs), Fixing Screws (M8 x 65mm x 2pcs)
Calibration Certificate	1	
Instruction Manual	1	

5. Getting Started

5-1. Configuration

Each parts name are described below.

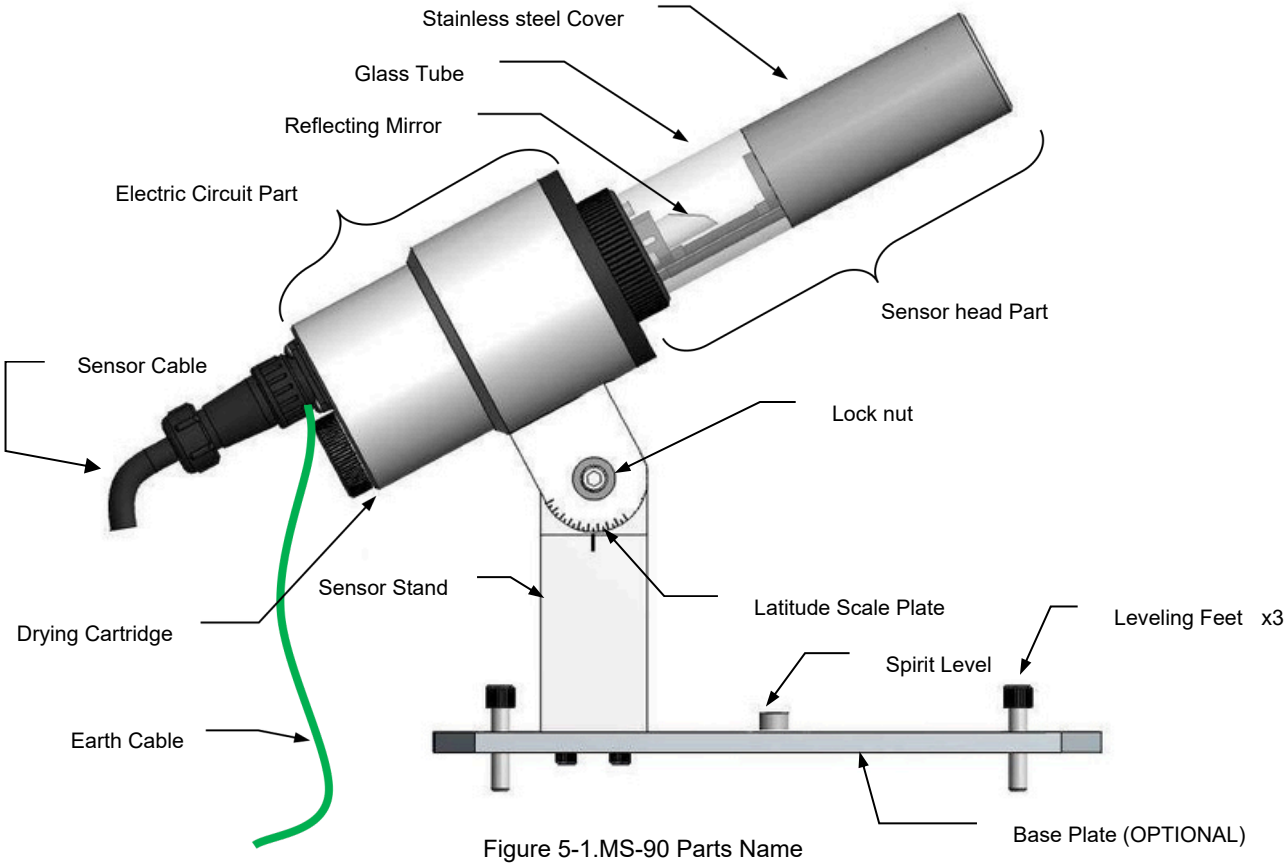

Figure 5-1.MS-90 Parts Name

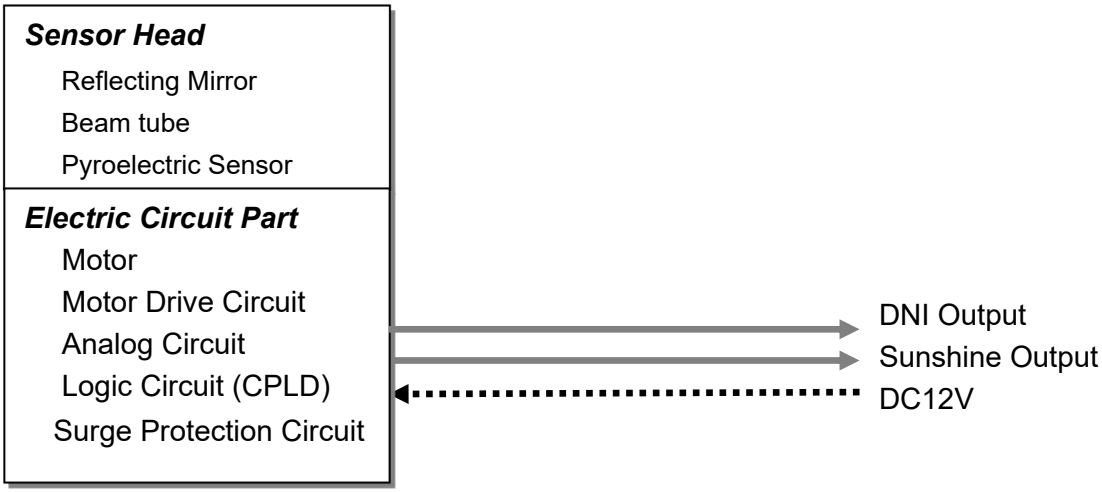

Figure 5-2. Configuration

Each parts name and its main functions are described below

Table 5-1.Each part name and its main functions

Parts Name		Functions
Sensor Head Part	Reflecting Mirror	Whenever a dispersion reflecting mirror rotates it once, light of the sun scatter-reflects it and leads it to the pyroelectric sensor.
	Beam Tube	The beam tube turns down the light from a dispersion reflecting mirror and leads it to the fret electric sensor.
	Pyroelectric Sensor	Pyroelectric sensors are thermal detectors. Temperature fluctuations produce an electric charge corresponding to the received thermal energy causing the temperature fluctuations.
Electric Circuit Part	Motor	The motor rotates the reflecting mirror one revolution in 15 seconds.
	Motor drive Circuit	The motor driver drives a stepping motor by pulse control.
	Analog Circuit	The analog circuit amplifies the output from a pyroelectric sensor.
	Logic Circuit （CPLD）	Logic Circuit compares the output from a pyroelectric sensor with the threshold of the sunshine and produces a pulse of one second if more than the threshold.
	Surge Protection Circuit	Surge Protection Circuit removes instruction thunder serge.

5-2. Installation

1. Preparation: Orientation

The ideal mounting location for MS-90 is a place which has a free field-of-view without any obstructions (such as buildings, trees, and mountain). In practice, it is difficult to find such locations; therefore, some practical recommendations on how to minimize undesired effects of reflecting or obstructing surfaces are given next:

□□ Select a mounting position which it is free from obstructions at 5°above horizon.

□□ The setup location should be easily accessible for periodic maintenance.

□□ Avoid installing the MS-90 in and area with surrounding objects e.g. towers, poles, walls or billboards with bright colors that can reflect solar radiation onto the sunshine duration meter. Those same objects may obstruct the direct beam of the sun causing gaps in quality data.

MS-90 is installed in North/South direction.

Table 5-2. Orientation of MS-90

Installing Location	Direction of Connector Side	Direction of Glass Tube Side
Northern Hemisphere	South	North
Southern Hemisphere	North	South

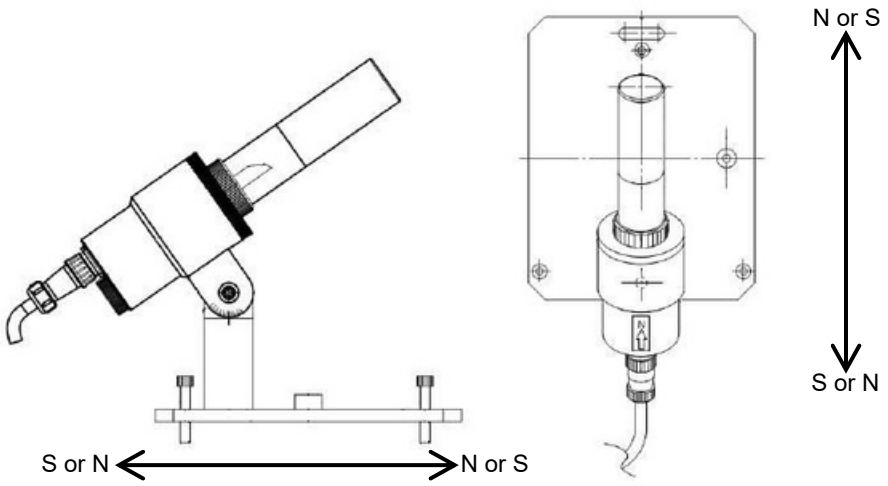

Figure 5-3. Checking the Orientation

To check the North/South direction:

□□ Using a smart phone which has an electric compass with true north mode.

□□ Using accurate terrain map

By referencing a mountain, a building, or a tower which can be seen in far location from the installation site, figure out the direction of the object from the site on an accurate terrain map (such as Google Map), the accurate north/south direction can be determined by using protractor.

□

□□ Determining the true North-South direction from the solar position at the time of meridian

Meridian information can be determined on many websites. It can also be determined by using shade of a straight stick standing perpendicular to the ground or a string with weight hanging which is created at the time of meridian.

2. Preparation: Installation Base

Prepare the installation base for mounting MS-90, according to the verified orientation in above step.

□ Mounting on the Base Plate (optional):

When optional Base Plate is used, install it on the installation base in the following procedure.

NOTE:A procedure below explains the installation in the Northern Hemisphere. In case of installation in the Southern Hemisphere, the North and South would be in opposite positions.

1) Mount MS-90 main unit on the base plate (refer to Figure 5-1).
2) Mount the base plate on your mounting base. Please follow the Table 5-2 for the direction adjustment.
3) Insert the fixing bolts in the fixing holes and fasten enough that the bolts does not come off.
4) Level the Base Plate using leveling feet; the air bubble in the spirit level should be positioned within the center circle.
5) Fasten the bolts securely as making sure the level and North/South orientation of the Base Plate are maintained.
6) After the bolts are tightened securely, check the level and North/South orientation of the Base Plate once again.

3. Mounting the Main Unit

Mount the main unit on the base plate, which was prepared in the step 1 and 2 above, in the North – South direction. Adjust the Latitude Scale Plate to the latitude of the installing location and fasten the fixing bolt on the Latitude Scale Plate with hex wrench.

.

4. Connecting Cables

1) Connect the sensor cable to the MS-90 connector. This connector is waterproof; make sure to securely fasten the connector until the connector ring is completely closed.
2) Connect the No. 1 and No.2 pins of the sensor cable to a DC power supply. Connect No.3 and No. 4 pins to pulse input terminal, and No. 5 and No.6 pins to analog input terminals of a data logger.
3) See table below for the corresponding cable colors and signal definitions. Make sure to connect them correctly.

Table 5-3.Cable Colors and Outputs

Connector Pin No.	Cable Color	Definition of Signals
1	Red	Power Supply +12V
2	Black	Power Supply 0V
3	Yellow	Sunshine Duration Pulse +
4	Green	Sunshine Duration Pulse -
5	Brown	DNI Analog Output +
6	White	DNI Analog Output -
—	Shield	FG *Connect to Grounding cable on power supply side

Connect the MS-90, Power Supply and data logger in following manner.

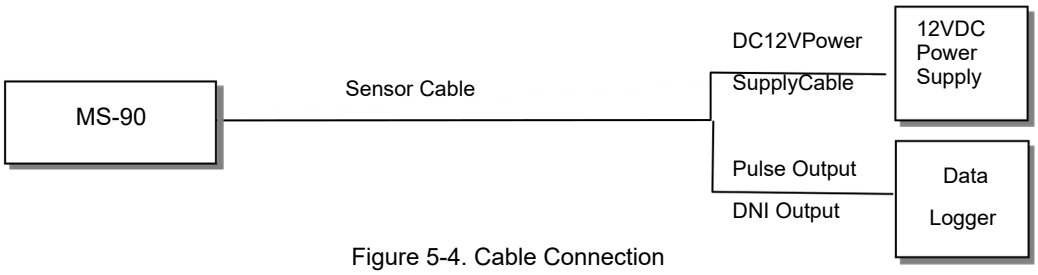

Figure 5-4. Cable Connection

5.Grounding

Connect the grounding cable to earth ground. MS-90 is delivered with 1m of grounding cable already attached to the sensor main unit connector part. The cable end is untreated, so handles necessary and connect to earth ground on installation base.

Connect the shield cable from the sensor cable to earth ground on the power supply side. The grounding cable from the sensor main unit and the shield cable from the sensor cable do not have electrical conduction, thus they both need to be connected to earth ground.



Figure 5-5. Grounding Cable attached to the sensor Main Unit

6. Measurement Principle

1. Sensor Head

The reflecting mirror inside the sensor head rotates once every 15 seconds by pulse motor; direct solar radiation is reflected onto the light receiving element which uses pyroelectric element in the rate of once per every 15seconds. This pyroelectric element outputs voltage which is proportional to the changes (micro coefficient) in the thermal energy against this reflecting light. In this process, the diffuse radiation is canceled and the peak voltage is proportional to DNI.

2. Sunshine Duration

Inside the analog circuit, the output from pyroelectric element is applied to the comparator circuit as it is enhanced by the amplifier. The comparator circuit is setup with reference voltage, which is equivalent to the threshold value (120W/m_2) standardized by World Meteorological Organization (WMO),by adjusting the trimmer resistance; when Direct Normal Incidence (DNI) exceeds this threshold value, it is determined as there is sunshine. Moreover, when the logic circuit recognizes the “sunshine” from the logic values which determine either “sunshine” or “no sunshine”, the non-voltage contact is made for one second; such measurement is processed once every 15 seconds, and its result will be the output of Sunshine Duration Meter.

3. Direct Solar Irradiance Output

The pyroelectric sensor converts and outputs the reflected light into voltage value. However, this output signal is a momentary value and is not proportional value to the direct solar irradiance; thus setup the data logger to obtain the maximum voltage value during the 15 seconds. You could also setup the data logger to take continuous samplings in 50msec interval and extract the maximum value out of sampled data within 15 seconds cycle by data processing to obtain the direct solar irradiance.

4. Sunshine Duration Pulse Output

Sunshine duration is defined by counting the output of solar direct irradiance which exceeds 120W/m_2. MS-90 measures at 15 seconds sampling rate. Therefore, if 240 times of direct solar irradiance was counted in 1 hour, it means that there was 1 hour of sunshine duration. If 120 time of direct solar irradiance was counted in 1 hour, it means that there were 0.5 hours of sunshine duration.

MS-90 uses a non-voltage contact signal, and when the sunshine is detected, the circuit contact closes for 1 second. When measurement is taken with data logger is connected, MS-90 should not be connected to the channel for analog voltage input, thus connect to non-voltage contact pulse input channel.

When the power is supplied, the mirror starts to rotate. Although when the mirror faces the sun direction the pyroelectric sensor reacts, the output pulse for detecting the sunshine is not output at that moment. The pulse contact is closed at the timing of the last 1 second of the 15-second cycle after the power is supplied. When there is very low irradiance, representative of no sunshine, the contact for the sunshine detection output maintains [open] condition.

5. Movement, Signal timing

A mirror begins a turn after connection of the power supply. The mirror turns in a period for 15 seconds. When the mirror turns to the direction of the sun, the pyroelectric sensor reacts, but does not yet give the sunshine output pulse at that point. It makes the pulse point of contact in a timing of last one second of the period for 15 seconds from power supply injection. The point of contact of the sunshine output usually maintains the state of the break when there is no sunshine. Figure 6-1 is a chart in the timing of the output signal.

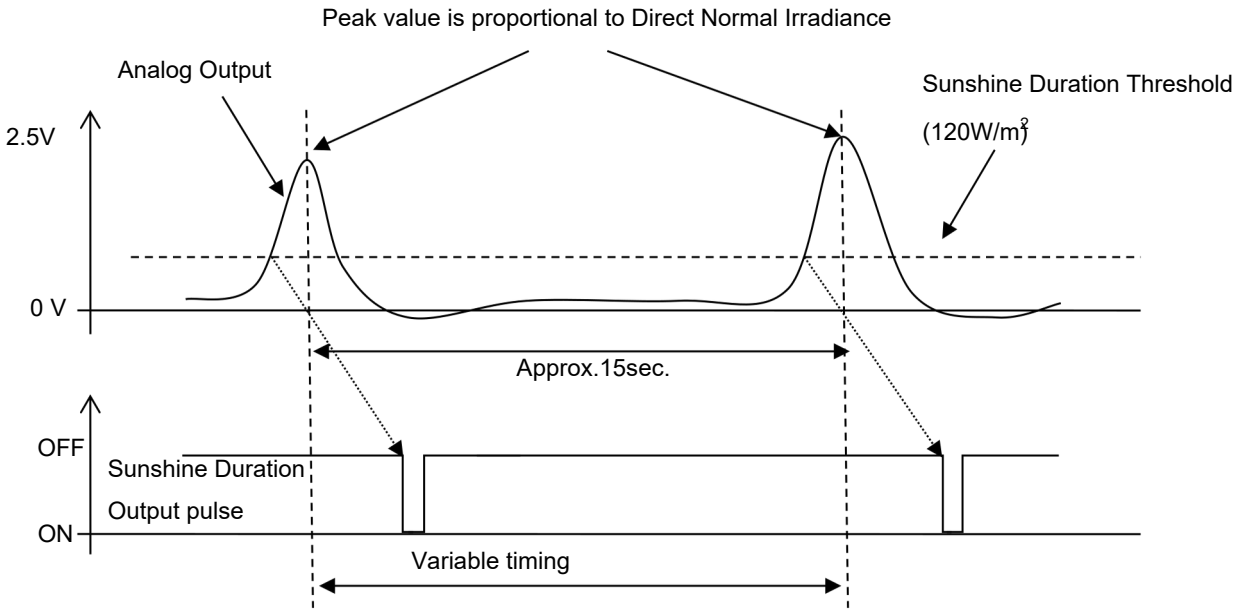

Figure 6-1.Direct Solar Irradiance Measurement

6. Caluculate Direct Normal Irradiance

Direct Normal Irradiance (DNI) is calculated by the following formula.

$$Ir\ [W/m^2] = Dp\ [mV] \div S\ [mV/W \cdot m]^{-2}$$

Dp [mV]: Peak voltage at 15 second intervals of analog output.

S [mV/W·m]^2: Sensitivity constant of MS-90

*The sensitivity constant S of MS-90 is stated on the calibration certificate and product label.

7. Maintenance & Troubleshooting

7-1. Maintenance

To maintain accurate measurements, it is necessary to check and do the following:

With routine maintenance and periodical calibration, MS-90 can be used fora long period of time, likely more than 10 years. Depending on the installation and operating environment, such as near heavy traffic road sand airports, MS-90 may get more impact from the environment. It is highly recommended to perform proper maintenance for the installation and operating environment.

Table 7-1.Maintenance Items

Check Items	Frequency	How To	Effects
Clean Glass Cover	Several times per 1week	Wipe the dirt on the glass cover by soft cloth and alcohol.	Solar radiation is blocked by the dirt on the glass cover and cause decrease in output.
Check Glass Cover Condition	Every Week	Check glass cover for any movement, scratch and/or crack.	Water may leak inside by rain drops and condensation causing damage to the sensor and internal parts. MS-90 may not output any sunshine misjudgment
Check Mirror Rotation Condition	Every Month	Check the reflecting mirror for its movement; make sure it is rotating smoothly and not stopped or rotating irregularly.	signal, or may cause between sunshine/not sunshine.
Check Horizontal Level	Every Week	Check and make sure the MS-90 installation base is in horizontal position and adjust the level using spirit level as necessary	Measurement error corresponding to the shifted incident angle will be accounted in the measurements.
Check Sensor Latitude and Tilt Condition	Every Month	Check the latitude scale to check for any shifts in the sensor position.	Measurement error corresponding to the shifted incident angle will be accounted in the measurements.
Check Sensor Installation Direction	Every Month	Check the direction of MS-90installation. Make sure it is facing towards the right direction.	Measurement error corresponding to the shifted direction angle will be accounted in the measurements.
Check Silica Gel Condition	Every Month	Check the silica gel for a color change from blue to reddish color color been changed, replace with new silica gel. Contact Instrufiber for calibration.	Condensation may occur inside the glass cover due to humidity and may lead to misjudgment of sunshine/no-sunshine. Leaving without replacing silica gel may lead to damaging the MS-90.
Calibration	Every 2Years		May lead to misjudgment of sunshine/no-sunshine.
Service/Overhauling	Every 2 Years	Contact Instrufiber for service to replace packing and O-rings which are used in parts of MS-90 and consumable parts.	overhaul Water leakage inside the sensor may occur easily, and lead to misjudgment of sunshine/ no-sunshine if not treated.

7-2. Calibration

Itis recommended to recalibrate the instrument once every 2years. For further information about the calibration and recalibration, please contact Instrufiber.

MS-90is calibrated for direct solar irradiance by comparison measurement against the reference pyrheliometer, and sunshine duration is calibrated to the voltage value which the threshold value level is converted to 120W/m^{2}by direct solar irradiance.

7-3. Troubleshooting

Check the following items in case of trouble with the instrument. If any questions should remain, contact Instrufiber for further technical support.

Table7-2.Troubleshooting

Failure	Action
MS-90does not output DNI signal	Check reflecting mirror; make sure the reflecting mirror is rotating. a) If the reflecting mirror is stopped ・ Check the sensor cable and output cable connection; make sure they are connected properly and not disconnected. ・ Check the supply voltage for the power supply is DC +12V. b) If reflecting mirror is rotating ・ Check the connection and settings on the data logger.
Mirror stopped rotating	・ Check the power supply; make sure the power supply voltage is DC +12V. If the power supply is in proper condition, turn OFF the power once and put it back ON again. If the mirror starts to rotate after the power is back ON, check the output. If the mirror does not start rotating or there is no output although the mirror is rotating, contact Instrufiber for repair. ・ it may be affected by a strong noise source. Remove such noise source by such as noise-cut transformer and supply stable power source.
Sunshine signal is output during the night time.	・ Check and make sure the MS-90is properly connected to ground. ・ When the MS-90 is connected to data logger along with other instruments, and if the input channel COM terminal on the data logger is communized with other channel, the connection maybe interrupted by another instrument. Check the input format and grounding connection for the other instrument(s).
Condensation inside the glass cover	Hold the screw part at the base of the glass cover and turn it strongly counterclockwise to loosen the screw. When the screw is removed, slowly pull out the glass cover and wipe inside with soft cloth to remove the condensation. Then replace the silica gel.

8. Specifications

8-1. Sensor Specifications

Table 8-1.Main Unit Specifications

Items		Details
Wavelength Range		300 to 2,700nm
Measurement Interval		15s
Mirror Rotation Speed		4 revolution/minute
Sunshine Duration Threshold		Direct Solar Irradiance 120 W/m^2
Sunshine Duration Error		Within±10% against the Sunshine Duration Threshold
DNI Detection Error		±5%（@>700W/m^2 clear day）
DNI Sensor Sensitivi		1.785 [mV/W・m^2]
Tilt Response （±23.4°）		±5%
Temperature Response (-20℃ to 45℃)		±5%
Geographic Application		Lattitude(－58°to +58°) / Longitude(0°to 360°) *May not be able to take measurements in area other than stated above at sunrise and sunset in seasons around midsummer.
Allowable Installation Angle Range		Elevation Angle:Within ±5°against latitude of installation site Azimath Angle:Within ±5°against true north of installation site *May not be able to take measurements when MS-90 is installed too far from above range.
Supply Voltage		10.5 to 12.5VDC
Supply Current		400 to 470mA
Operating Temperature		-20 to 45℃
Outputs	DNI	Analog Voltage Output 0 to 2.5V (0～1400 W/m^2) *This signal does not maintain the maximum value, thus when collecting data with data logger, setup it up at 50msec sampling rate and record the maximum value during the 15 seconds.
	Sunshine Duration	Output: Non-voltage contact output Pulse Width: 1±0.05sec. Sunshine: Make contact for one second every 15 seconds (1pulse/15 sec., 240pulse/hour) No Sunshine: Contact remains in break condition
Cable		Sensor Output Cable: 10m attached Grounding Cable: 1m Grounding Cable attached Use one of the 4 screws on the sensor connector as grounding terminal. To avoid ground loop, there is no electrical conductivity with sensor cable shield (FG). Connect to ground by sensor alone.
Weight		Main Unit: 2.2kg Base Plate: 800g （Option）
Materials		Body:A6063BD Glass Tube: Borosilicste Glass (Hard Glass) Sensor Cover: SUS

8-2. Cables Specifications

Table 8-2.Cable Specifications

Cables	Details		Terminal Color	Wire Colors	Output
Output Cable	Material: Diameter: Outer Diameter: Connector Diameter: Cable end:	MVVS 0.5mm2x 6 pins Φ8.0mm Φ20mm 1cm of cable and coating removed solder plated	1 2 3 4 5 6 Shield	Red Black Yellow Green Brown White ---	+12V GND Pulse Output + Pulse Output – DNI Analog Output + DNI Analog Output – FG

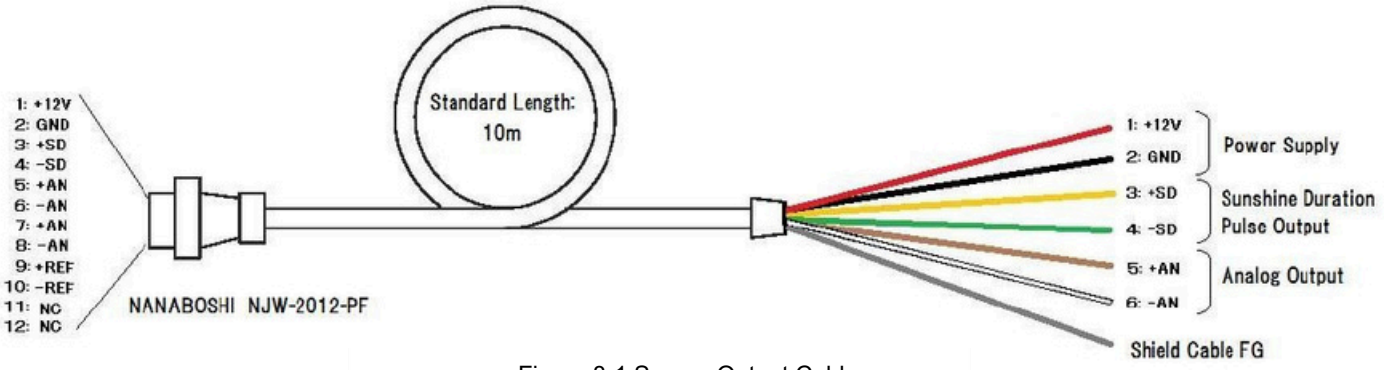

Figure 8-1.Sensor Output Cable

NOTE: To avoid ground loop, there is no electrical conductivity with sensor cable shield (FG). Connect to ground by sensor alone.

8-3. Dimension

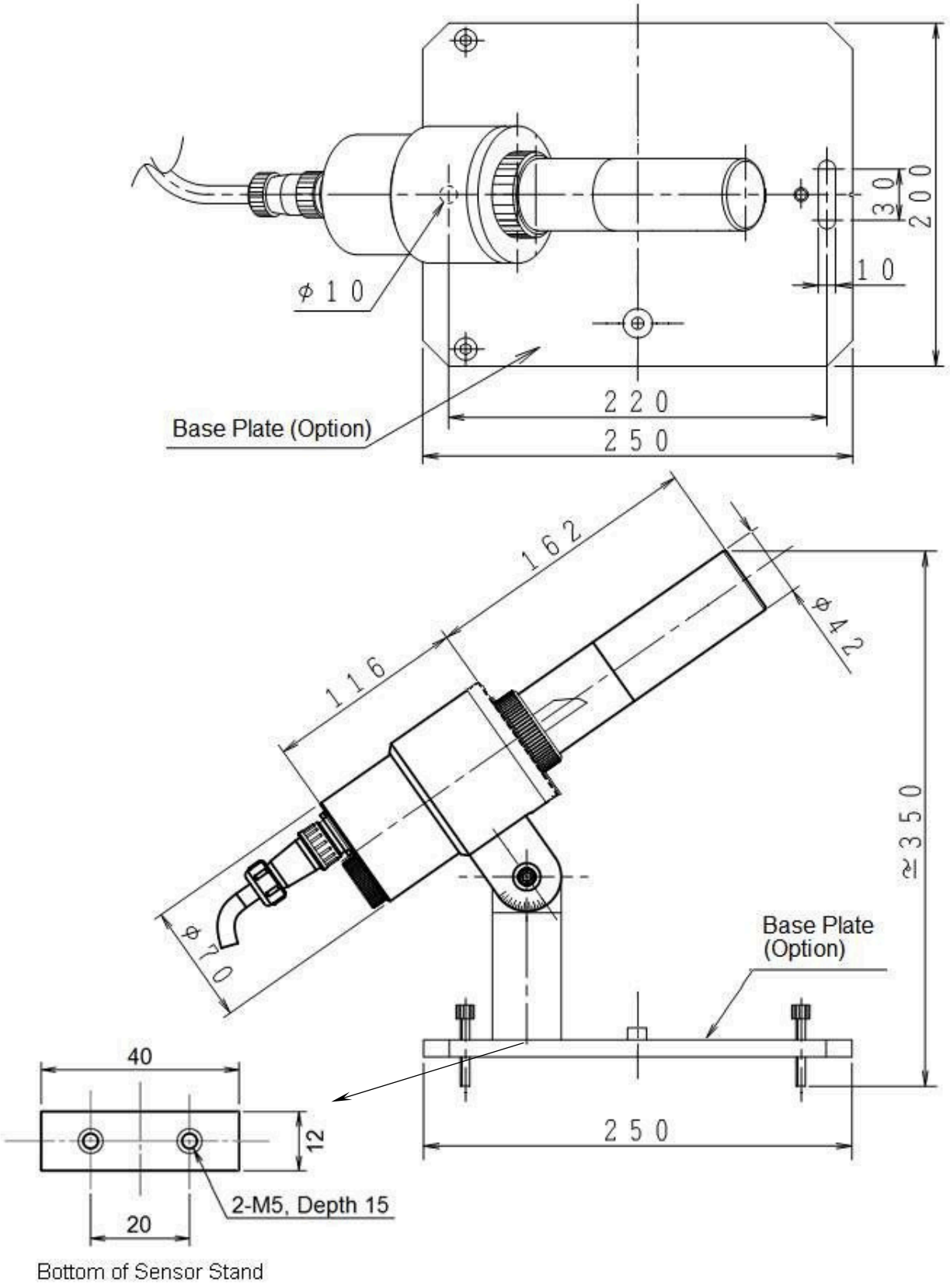

Figure 8-2.MS-90 Dimensions

8-4. Accessories &Consumable Parts List

Table 8-3.Accessories List

Optinal Items	Remarks
Base Plate	
Base Plate Fixing Bolts & Nuts	1set (includes bolts and nuts 2pcs each)
Replacement Silica Gel	Replacement Silica Gel (desiccant) container(500g)

Table 8-4.Consumable Parts List

Parts Name	Used Parts	Qty.	Remarks
O-Ring KS-16	Drying Cartridge	1	
O-Ring G-40	Sensor Glass Tube	1	
O-Ring G-60	Motor Base	1	
Connector Packing for NJW-2012RM	Output Connector	1	Nanaboshi Electric MFG Co., LTD
Silica Gel	Drying Cartridge		Round type

9. APPENDIX

A-1. Data collection method using CR 300

Theconnection method for collecting data together with MS-90,a pyranometer, and temperature using the CR300 datalogger manufactured by Campbell Scientific, and setting example of CR300 sample program and software (LoggerNet) are shown below.

1.Connection to CR300

An example of connection to CR 300 is shown below.

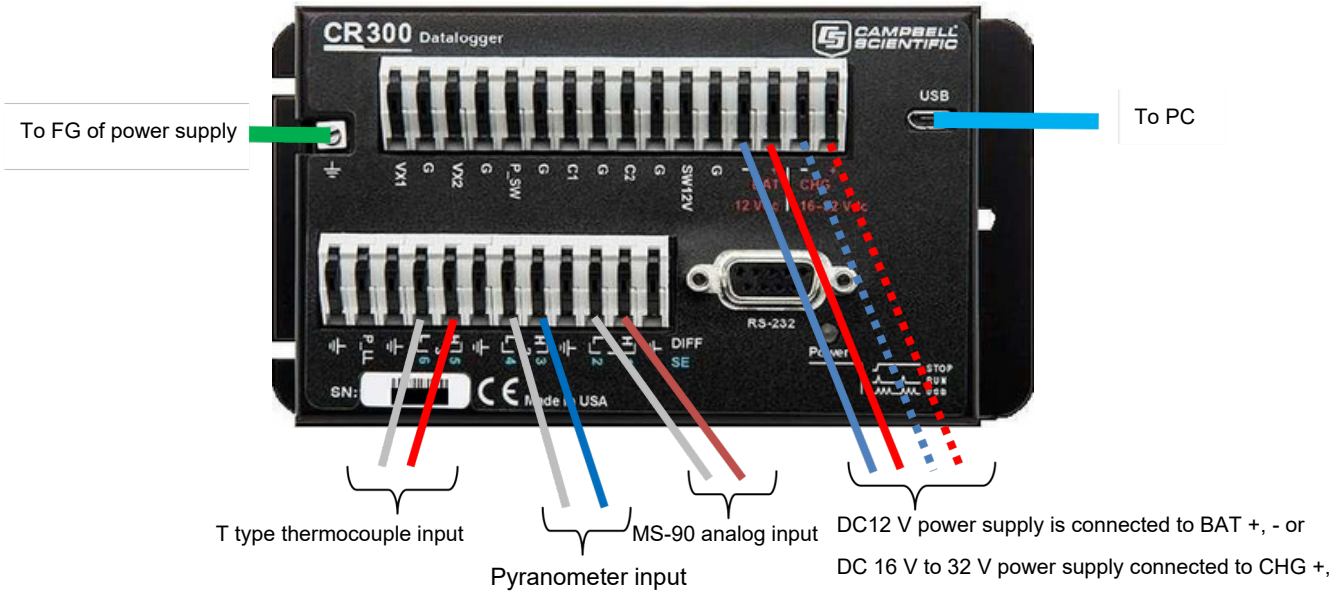

Figure A-1. Connection example to CR300

Table A-1. Connection to CR300

CR300Terminal block	*access point*	*Line color*	*Remarks*
CHG ＋	*＋16～＋32VDC*	—	*Power supply ＋*
CHG －	*0V*	—	*Power supply －*
DIFF 1：H	*MS-90 Analog output ＋*	*Brown*	*Differential Measurement*
DIFF 1：L	*MS-90 Analog output －*	*White*	*Differential Measurement*
DIFF 2：H	*Pyranometer ＋*	—	*Differential Measurement*
DIFF 2：L	*Pyranometer －*	—	*Differential Measurement*
DIFF 3：H	*T type thermocouple（temperature）＋*	*Red*	*Differential Measurement*
DIFF 3：L	*T type thermocouple（temperature）－*	*White*	*Differential Measurement*
USB	*USB cable to PC USB port*	—	
Ground terminal	*Connect to the power ground of MS-90*		*Connect withFG of other power supplyat one point*

CR 300, LoggerNet is a registered trademark or trademark of Campbell Scientific.Inc.

2. LoggerNet settings

To initially setup the CR300, you can download the LoggerNet Trial from Campbell Scientific's website and install it on your PC. You will only have 30 days for the trial, after that, you will need to purchase a copy of LoggernNet.
https://www.campbellsci.com/downloads

For details of setting, refer to CR 300 - Series Datalogger OPERATOR'S MANUAL.
Please also download from Campbell Scientific's website. When LoggerNet is activated, the following menu is displayed.



Select Setup from the main menu.
The Setup Screen appears. Click on "EZ View" in the upper right, and the EZSetup Wizard will start, so please press the Next button to make the basic settings.

3. Example program for a CR 300

Please edit the following program (“MS-90_sample_program.CR300”) or download it from our website.
Please edit the values according to the measurement environment in the following 4 places and use.
* In this program, a simple calculation method is adopted as a part for calculating the solar elevation angle. Therefore, it does not correspond to the leap year and summer time, so please set the time setting for the logger at the local time of the area to be installed and not the daylight saving time.

Line 7 Const	LAT = ±○○. ○○○○	← Please set the latitude of the measurement location. (- is the south latitude)
Line 8 Const	LON = ±○○○. ○○○○	← Please set the longitude of the measurement location. (- west longitude)
Line 9 Const	TimeZone = ±○	← Please enter the UTC time difference of the measurement location. (-11 to +12)
Line 10 Const	PyranoConst = ○○.○○	← DIFF 2ch: Please set the sensitivity constant of the pyranometer.

From the value of MS-90 and pyranometer, scattering solar radiation values can be automatically calculated and output to CSV file.
*Refer to CR Basic reference for details of the instruction.

```
‘——— Sample program  ————————————————————————————
'CR300 Series MS-90 sample program
Public MS90_signal,MS-90,MS-90Peak,MS90Max  As Float
Public Pyrano_signal,Pyrano,PyranoSum,PyranoAv As Float
Public Diffuse  As Float
Public PTemp, TCTemp As Float
```

```
Const    LAT = 35.67457' Input Latitude ←Please set the latitude of the measurement location.
                                                (- is the south latitude)
Const    LON = 139.6729' Input Longitude ←Please set the longitude of the measurement location.
                                                (- west longitude)
Const    TimeZone = 9      ' Input Time Zone ←Please set the UTC time difference. Etc, UTC-JST = + 9h
Const    PyranoConst = 10.84 / 1000    'Input pyranometer sensitivity ←Please enter the sensitivity constant
                                                of the pyranometer.
Const    MS90Const =1.786              ' Input MS-90 sensitivity ←Please enter the sensitivity constant
                                                of MS-90.
Const    SamplMax = 15/0.05            ' 15sec / 50msec Sampling

Const    Pi = 4 * ATN( 1 )             'Calculate Pi
Const    Rad = ( Pi / 180 )            'Convert to radians

Public rTime(9) As Long                'declare as public and dimension rTime to 9
Alias rTime(9) = Day_of_Year 'assign the alias Day_of_Year to rTime(9)

Units    MS90_signal=mV
Units   Pyrano_signal=mV
Units MS90=W/m^2 Units
Pyrano=W/m^2       Units
Diffuse=W/m^2      Units
TCTemp=Deg   C   Units
PTemp=Deg C

Public Elevation_angle, r_Elevation_angle, Elevation, r_LAT, Declination, Hour_angle, t_Time, Equation_of_time,
        Theta As Float     'Declare variables
Dim timcount

DataTable(Table1,True,-1)
        DataInterval(0,15,Sec,SamplMax)
        Sample(1,MS90Max,IEEE4)
        Sample(1,PyranoAv,IEEE4)
        Average(1,TCTemp,IEEE4,False)
        Sample( 1, Elevation_angle, IEEE4)
        Sample(1,Diffuse,IEEE4)
EndTable

'Main Program
BeginProg
        'Main Scan
        timcount = 1
        Scan(50,mSec,1,0)
                RealTime(rTime )
                VoltDiff(MS90_signal,1,mv2500,1,True,10,4000,1,0)
                VoltDiff(Pyrano_signal,1,mv34,2,True,10,4000,1,0)
                PanelTemp(PTemp,4000)
```

```
'TCSe(TCTemp,1,mV34,5,TypeT,PTemp,False,0,4000,1.0,0)
TCDiff=(TCTemp,1,mV34,3,TypeT,PTemp,False,0,4000,1.0,0)
MS90 = MS90_signal / MS90Const
Pyrano = Pyrano_signal / PyranoConst

If   timcount = 1 Then
        MS90Peak = MS90
        PyranoSum = 0
        PyranoSum = PyranoSum + Pyrano
ElseIftimcount = SamplMax Then
        If   MS90 > MS90Peak Then
        MS90Peak = MS90
        EndIf
        MS90Max = MS90Peak
        PyranoSum = PyranoSum + Pyrano
        PyranoAv = PyranoSum / SamplMax

        'Calculation Elevation_angle
        t_Time = (Hour + Minute/60 + Second/3600)
        Theta = (Day_of_Year - 1)/365 * 2 * Pi
        Equation_of_time = 0.000075+0.001868 * COS(Theta )-0.032077 * SIN( Theta )
                -0.014615 * COS( 2 * Theta )-0.040849*SIN( 2 * Theta )
        Declination = 0.006918-0.399912 * COS(Theta )+0.070257 * SIN( Theta )
                -0.006758 * COS( 2 * Theta )+0.000907 * SIN( 2 * Theta )
                -0.002697 * COS( 3 * Theta )+0.00148 * SIN( 3 * Theta )
        Hour_angle = (t_Time-12)/12 * Pi
                +(LON - (TimeZone*15)) * Rad + Equation_of_time
        r_LAT = LAT * Rad
        r_Elevation_angle = ASIN(SIN(r_LAT)*SIN(Declination)
                +COS(r_LAT)*COS(Declination)*COS(Hour_angle))
        Elevation_angle = r_Elevation_angle/Rad
        Elevation = SIN(r_Elevation_angle )
        Diffuse = PyranoAv - MS90Max * Elevation
Else
        If   MS90 > MS90Peak Then
                MS90Peak = MS90
        EndIf
PyranoSum = PyranoSum + Pyrano
EndIf

timcount = timcount + 1
If timcount>SamplMax Then
        timcount = 1
EndIf
CallTable Table1
NextScan
EndProg
```

‘————————————————————————————————————

4. ***How to create one CSV file automatically every day***

When acquiring data as a CSV file of one file per day, please configure your of LoggerNet settings as follows:
Once LoggerNet is open, start the Setup Screen.
Clicking on COMx / PakBusPort / CR300 Series in the Entire Network displays seven tabs in the right window. If you select “Schedule” in it, the following screen will appear.

Here, "Time" of "Base" is set to a value shorter by 1 second from "Collection Interval" setting. That is, "Collection Interval"
"For 1d 00h 00m 00s 000 ms", set it to"23: 59: 59".

① LoggerNet-Setup-Comport-CR300Series-Schedule

- In "Collection Interval", set the time to divide the file.
  * It should be longer than "Scan Interval" set on the program.
  If it is short, files with no data will be caught in the middle.

- Reduce "Time" of "Base" one second from "Collection Interval" time.
  * To make the beginning of the file 00: 00: 00 second.
  * The start of the file is 00: 00: xx unless it is shortened by 1 second.
  xx: "Scan Interval" set on the program

Here, "Time" of "Base" is set to a value shorter by 1 second from "Collection Interval" setting.
That is, if "Collection Interval" is 1d 00h 00m 00s 000 ms, set it to 23: 59: 59.

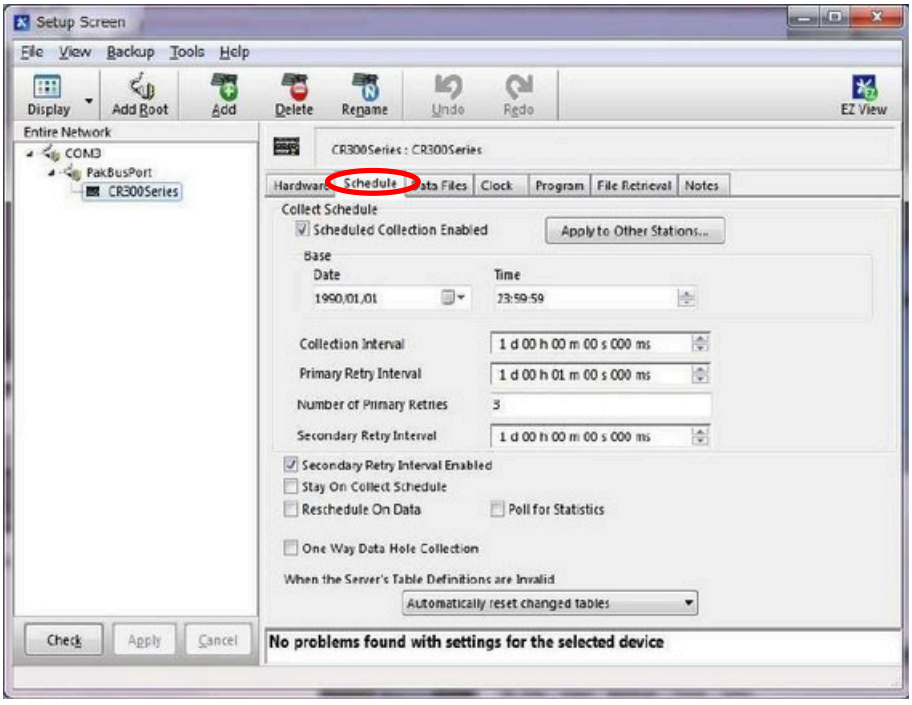

② LoggerNet-Setup-Comport-CR300Series-Data Files

· Select the "Data Table" you want to save.

· Set "File Output Option" to "Create Unique File Name".
  * To divide the file.

· If you want to make it a CSV file, set "Output Format" to "TOA 5" Set the end of the file name to ".csv".

The file name is optional and OK.

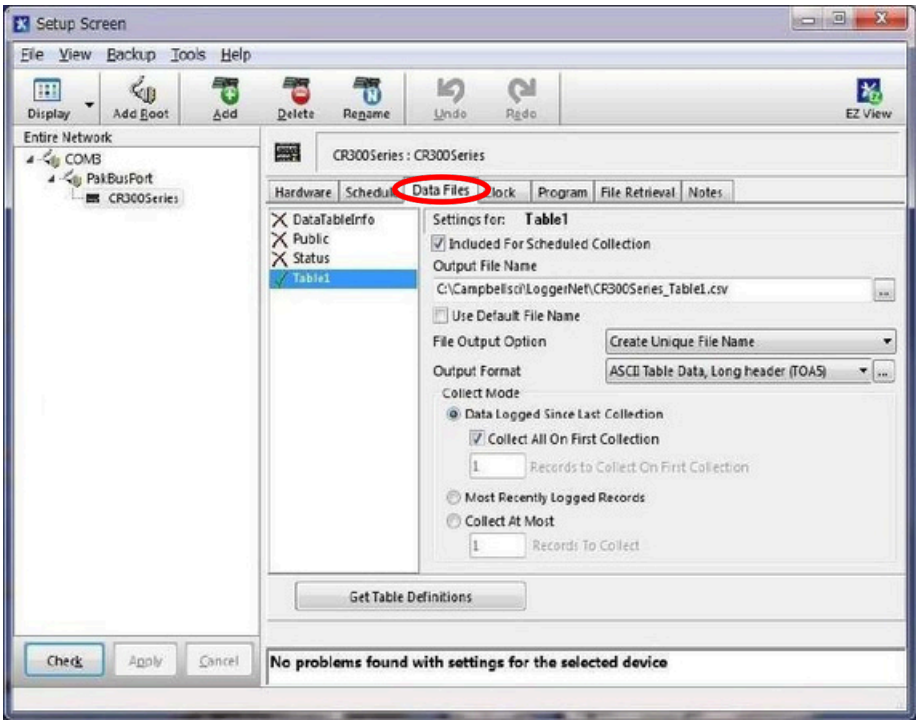

5. Acquired data

With the above operation, the data is automatically saved in the designated folder of the PC in CSV format with 1 file per day. Data capture takes place just before the date changes. Until then, the data measured on that day will be recorded in the CR 300's body memory and transferred to the PC at the end at the end of the day.

CSV file output format

TOA5	CR300Series CR300		2924 CR300.Std.04.00		CPU:MS-093DNI_sample_program_20170	14516	Ta b le 1
TIMESTAMP	RECORD	MS90Max	PyranoAv	TCTemp_Avg	Elevation_angle	Diffuse	
TS	RN			Deg C		W/m^2	
2017/8/6		Smp	Smp	Avg	Smp	Smp	
0:00:00.0	122	0.02554	0.05607255	28.897	-37.0524	0.07146	
2017/8/6	60	043	0.0529872	64	-37.31	715181	
0:00:15.0	122	0.03555	0.0428309	28.895	-37.313	730.07454	
2017/8/6	61	629	0.04479619	19	-37.310	23236	
0:00:30.0	122	0.02964	0.04182077	28.880	-37.306	670.06080	
2017/8/6	62	693	0.05573586	61	-37.303	05224	
0:00:45.0	122	0.03575	0.06192721	28.888	-37.299	360.06646	
2017/8/6	63	661		19		936	
~	~	~	~	~	~	~	
0:01:00.0	122	0.03765		28.880		0.06464	
2017/8/6	180	0.03355	0.03530647	29.827	-37.330	190.05565	
2017/8/6	64	963		33		554	
23:59:15.0	17	312	0.01895884	83	-37.327	03333	
0:01:15.0	122	0.04437		28.895		0.08262	
2017/8/6	180	0.04216	0.0183404	29.835	-37.323	8 0.04452	
2017/8/6	65	024		59		559	
23:59:30.0	18	875		84		723	
0:01:30.0	122	0.03575		28.901		0.08359	
2017/8/6	180	0.03305		29.846		0.05377	
23:59:45.0	19	074		82		336	

*Time stamp is attached every 15 seconds, MS-90 (MS 90Max) is the peak value for 15 seconds, the total solar irradiance meter (PyranoAv) and the air temperature (TCTemp_Avg) is the average value for 15 seconds. The solar elevation angle (Elevation_angle) includes a time error of ± 7.5 seconds.

* In this sample program, if there is no connection to the PC, the data that can be stored consecutively for approximately 130 days, depending on the setting conditions of CR 300.

A-2. Radiometric Terms

Table A-2.Definitions ofTerms

Terms	Definitions
Global Solar Irradiance/Global Horizontal Irradiance (GHI)	Hemispherical solar irradiance received on a horizontal plane surface, expressed in units of W/m2or kW/m2.
Pyranometer	A radiometer designed to measure the hemispheric solar irradiance over the wavelength range of about300 to 3,000nm.
Direct Solar Irradiance, Direct Normal Irradiance (DNI)	Normal-incidence solar irradiance received over a small solid angle which includes the circumsolar irradiance, expressed in units of W/m^2or kW/m^2.
Pyrheliometer	A radiometer which measures the direct solar irradiance over a certain solid angle including the circumsolar irradiance.
Diffused Solar Irradiance, Diffused Horizontal Irradiance (DHI)	Hemispherical solar irradiance without the direct solar irradiance, i.e. indirect irradiance of the scattered solar radiation (by air molecules, aerosol particles, clouds, etc.), expressed in units of W/m^2or $kW/m.^2$
Absolute Radiometer	Primary reference radiometer which can measure the direct solar radiation (irradiance)..
World Meteorological Organization (WMO)	Specialized agency of United nations, who has authoritative role in standardization and control over international meteorological related activities
World Radiation Reference (WRR)	Radiometric reference instrument system which has an uncertainty of less than +/-0.3%, expressed in SI units. This reference is maintained by the World Meteorological Organization(WMO), and it has been issued since January 1, 1990
ISO9060	An ISO norm (International Standard). ISO9060defines the pyranometer and pyrheliometer characteristics, their requirements and corresponding categories. Global pyranometers are subdividedinto3 classes in this standard.
Right Ascension & Declination	Astronomical position is expressed with right ascension and declination. Extending the earth equator line to the sky; stating the equator line in the sky as 0°(zero degree) and the declination in the sky Arctic Pole would be 90°in the northern hemisphere.